DIFERENTIAL	4±2 °C
MAX TEMPERATURE IN THE BOX	150 °C
MIN TEMPERATURE IN THE BULB	−10 °C
MAX TEMPERATURE IN THE BULB	110 °C
DIELECTRIC RIGIDITY	2000v 1s

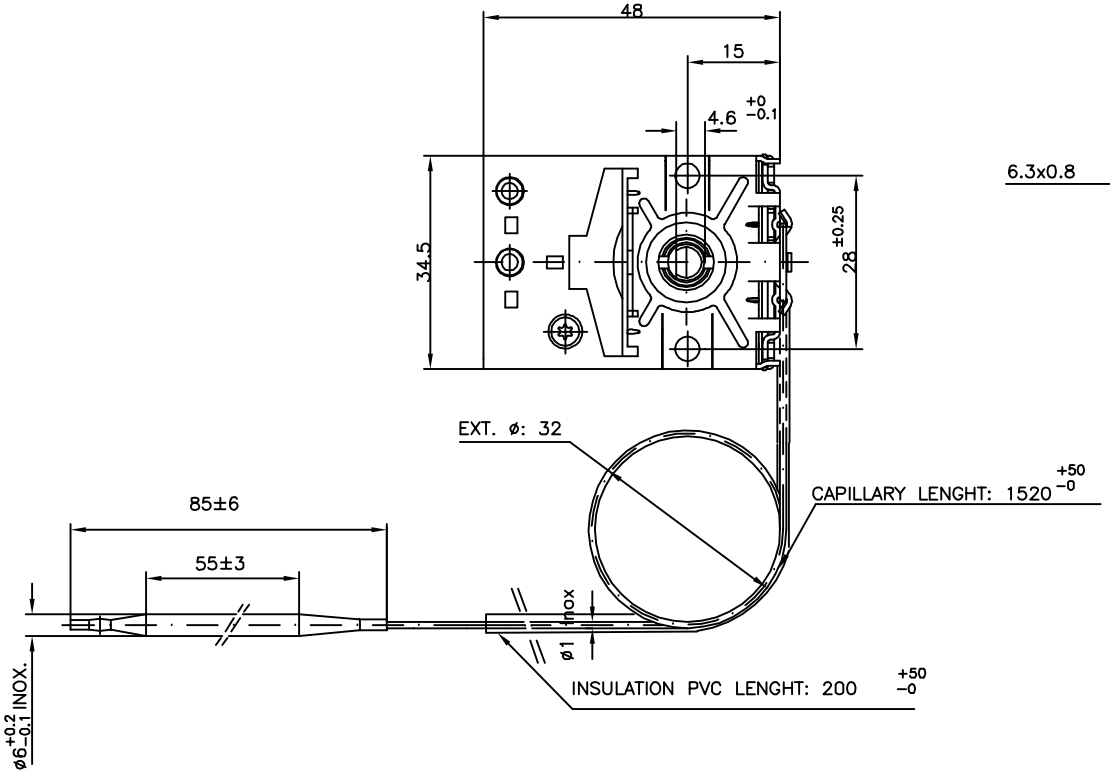

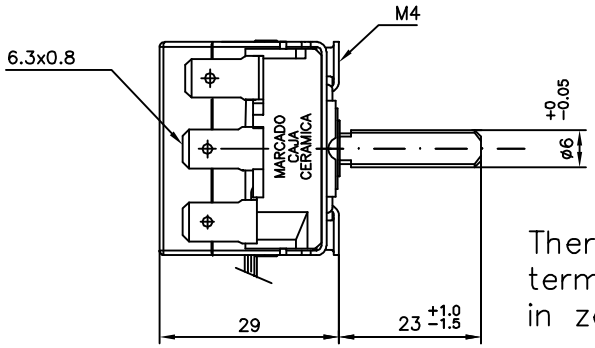

ELECTRIC DRAWING IN OFF POSTION

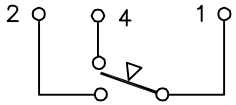

1−2: 20A 250V

1−4: 4A 250V

REGULACION

Thermostat is disconnected from terminal 2 at ambient temperature in zero position

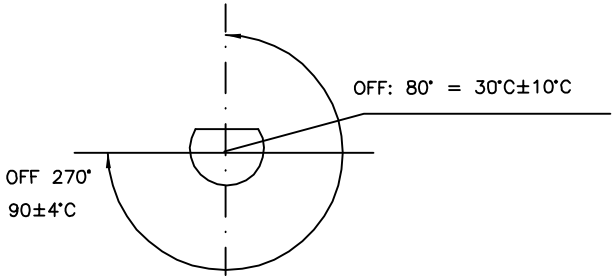

Rotation	Torque
0°-5°	2 - 8 Ncm
5°-270°	2 - 8 N·cm
<0° / >270°	> 250 N·cm

Plastic cover colour	Black
Cap. insulation colour	Black PVC

APPROVALS

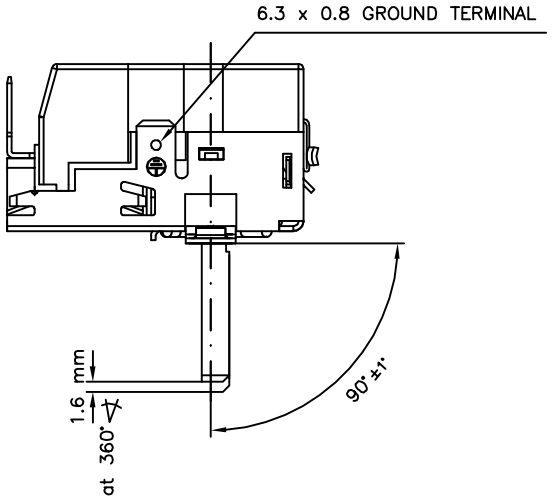

CERAMIC BOX PRINTING

T−150 EIKA Ref.

Cust. Ref. Manufacture date

NOTE: 1.−THE INDICATED VALUES ARE ACCORDING TO THE DISCONNECTION TEMPERATURES

2.−THE THERMOSTAT WITH THE BULB AT 4°C AND 0°< WILL BE DISCONNECTED

EIKA	81381646
CUSTOMER Ref.	
CUSTOMER	Mogilevtorg

N.	Aldaketaren azalpena	Data	Egilea Data	Adamec 11−13
	ELECTRIC THERMOSTAT		N° 81381646	